COMMERCIAL SNOW GUARDS
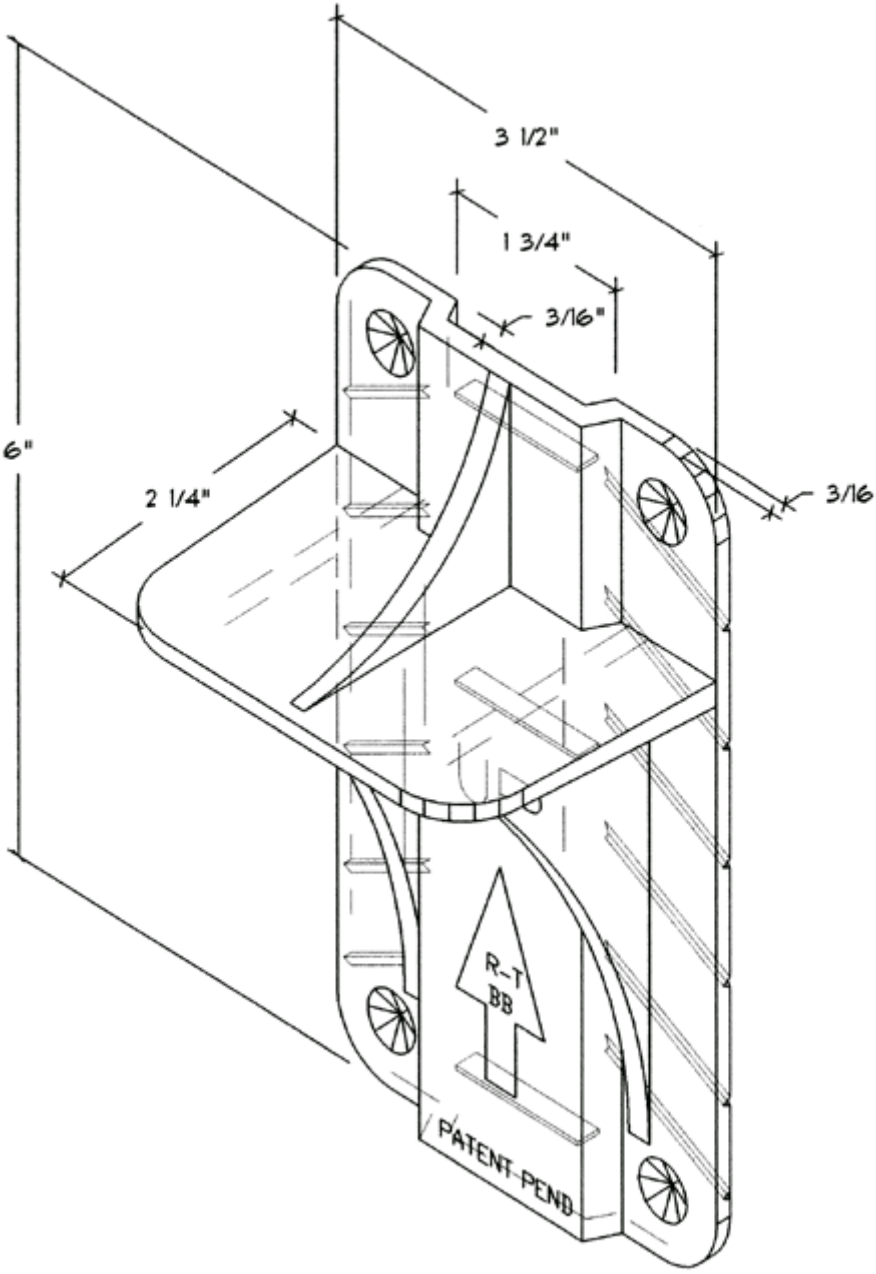
CL SNOW GUARD (STRUCTURAL RIB)